Electrolux PROFESSIONAL

Digital Undercounter ecostore HP Premium Refrigerated Counter - 590lt, 8 Drawers

ITEM #

MODEL #

NAME #

SIS #

AIA #

710156 (EH4HBFFFF)	8-drawer Refrigerated Counter 590lt, -2+10°C, AISI 304, with drawers with frame only

Short Form Specification

Item No.

AISI 304 stainless steel panels, AISI 430 bottom panel, galvanized back panel. Worktop thickness 50mm. N. 8X1/2 drawers with frame only. Built-in refrigeration unit. Operating temperature: -2+10°C. R290 gas in refrigeration circuit.

APPROVAL:

Main Features

- Preservation performances and temperature uniformity within the cell guaranteed at 5-HEAVY DUTY (40°C) working conditions according to EN16825:2016 test protocol.
- Adjustable temperature range from -2 °C to +10 °C to suit meat, fish and dairy storage requirements.
- Large digital white-digit display with humidity selection button (3 preset level), internal temperature display and setting, manual activation of defrost cycle and turbo frost cycle (to rapidly cool warm loads).
- Equipped with Optiflow forced air circulation system for rapid cooling and temperature distribution within the cell.
- 0mm clearance installation space: tower configuration cooling unit guarantee performance with frontal ventilation only; this unique solution allows installation against the wall or side by side with other appliances, even on the cooling unit side to maximize the use of kitchen space.
- Combination of doors and drawers to suit any configuration needed, with the possibility to change the configuration on site. Right cooling unit available on request.
- Fully removable cooling unit to facilitate maintenance.
- Frontal and easy access to all components in the cooling unit.
- Mounted on stainless steel feet to give 150 mm (-5/+50 mm) clearance for ease of cleaning the floor.
- Fully compliant HACCP digital control: when temperature exceeds critical limits, acoustic and visual alarms are activated. Up to two months of event are kept in memory.
- External bottom panel in stainless steel.
- Anti-tilt runners accept GN 1/1 containers.
- External back panel in galvanized steel.
- Self closing stainless steel doors (< 90°).
- Certified safety CE requirements.
- Prearranged to fit RS485 port to facilitate connection to a remote computer and integrated HACCP systems.
- Hot gas automatic evaporation of defrost water.
- Connectivity ready for real time access to connected appliances from remote and data monitoring (requires optional accessory).
- Tropicalized unit.

Construction

- Drawers with frame only.
- 1/2 drawers are suitable for basins up to 200mm high.
- Worktop in AISI 304 Stainless steel with a 50 mm profile.
- If needed, working top can be removed for easier handling during installation (in case of narrow doors).
- Anti-drip profile on stainless steel worktop edge.
- Interior base with rounded corners, pressed from a single sheet.
- Ease of cleaning and high hygiene standards thanks to the rounded internal corners, the easily removable runners, grids and air conveyors.
- Internal structure with 15 charging positions (3 cm pitch) available to host GN 1/1 grids, ensuring higher net capacity and a greater storage space.
- Internal and external doors, front and side panels and removable worktop in AISI 304 Stainless steel.
- Built-in refrigeration unit.
- Developed and produced in ISO 9001 and ISO 14001 certified factory.
- Fault code display.
- Internal dimension of the drawers:
  - models with 2 1/2 drawers: 1st drawer (top drawer) 203x302x521 / 2nd drawer 223x302x521 (HxWxD)
  - models with 3 1/3 drawers: 1st drawer (top drawer) 98x302x521 / 2nd and 3rd drawers 118x302x521 (HxWxD)
  - models with 1/3+2/3 drawers: 1st drawer (top drawer) 98x302x521 / 2nd drawer 333x302x521 (HxWxD)

Sustainability

- Fitted with 90 mm thickness of cyclopentane insulation for best insulating performance (thermal conductivity: 0,020 W/m*K) and lowest environmental impact (GWP=3).
- Removable triple-chamber balloon magnetic gasket to improve insulation and reduce energy consumption and ease of cleaning.
- Frost Watch Control starts automatically the defrosting process only when needed and ends once ice is melted, improving energy efficiency results.
- Hydrocarbon refrigerant gas R290 for the lowest environmental impact (GWP=3) - CFC and HCFC free.
- CFC and HCFC free, highly ecological refrigerant type: R290 (ecological gas in foam: cyclopentane). Hydrocarbon refrigerant gas R290 for the lowest environmental impact (GWP=3), to reduce green house and ozone depletion effects.

Optional Accessories

• 2x½ drawer kit for refrigerated counters	PNC 881058	❑
• 3x1/3 drawer kit for refrigerated counters	PNC 881059	❑
• 1/3 and 2/3 bottle drawer kit for refrigerated counters	PNC 881071	❑
• 1/1 GN plastic container, H=65 mm	PNC 881110	❑
• 1/1 GN plastic container, H=100 mm	PNC 881111	❑
• 1/1 GN plastic container, H=150 mm	PNC 881112	❑
• Kit 5 wheels, H=100 mm (3 with brakes) for 4 compartment refrigerated counters	PNC 881192	❑
• Kit 5 wheels, H=150 mm (2 with brakes) for 4 compartment refrigerated counters	PNC 881194	❑
• Lock for refrigerator/freezer counters with 4 compartments - h700mm (can be used in kit for Marine conversion)	PNC 881244	❑

The company reserves the right to make modifications to the products without prior notice. All information correct at time of printing.

Digital Undercounter ecostore HP Premium Refrigerated Counter - 590lt, 8 Drawers

Front

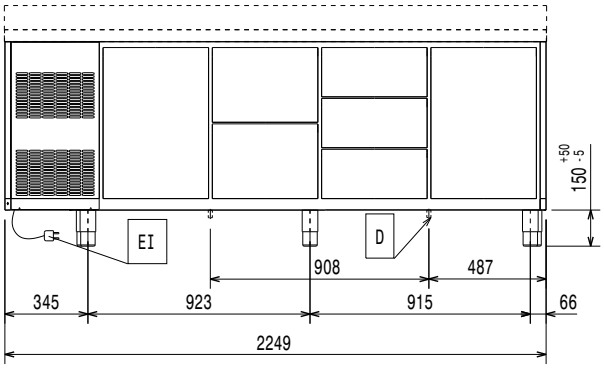

Side

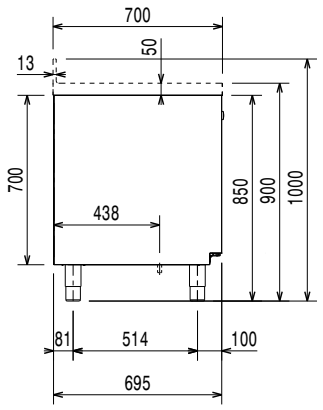

EI = Electrical inlet (power)

Top

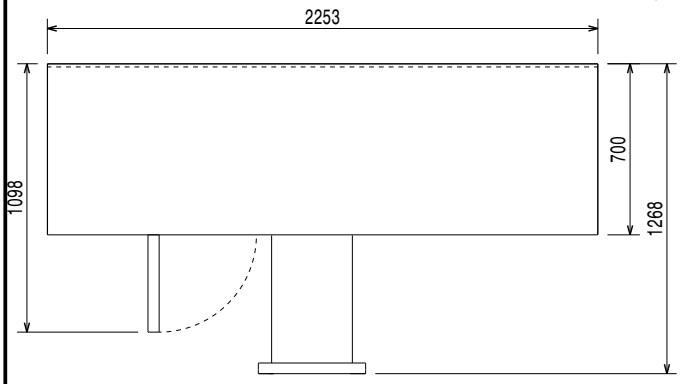

Electric

Supply voltage:	
710156 (EH4HBFFFF)	220-240 V/1 ph/50 Hz
Electrical power max.:	0.25 kW
Defrost Power:	0.22 kW
Plug type:	CE-SCHUKO

Key Information:

Gross capacity:	590 lt
Net Volume:	212 lt
External dimensions, Width:	2253 mm
External dimensions, Depth:	700 mm
External dimensions, Height:	900 mm
Internal Dimensions, Width:	1706 mm
Internal Dimensions, Depth:	560 mm
Internal Dimensions, Height:	550 mm
Net weight:	176 kg
Shipping volume:	1.88 m³
Depth with doors open:	1110 mm
Height adjustment:	-5/50 mm

Refrigeration Data

Control type:	Digital
Compressor power:	1/4 hp
Refrigeration power at evaporation temperature:	-10 °C
Min/Max internal humidity:	40/85
Operating temperature min.:	-2 °C
Operating temperature max.:	10 °C
Operating mode:	Ventilated

ISO Certificates

ISO Standards:	ISO 9001; ISO 14001; ISO 45001; ISO 50001

Sustainability

Current consumption:	1.8 Amps
Energy Class (EU Reg. 2015/1094):	C
Yearly and daily energy consumption (EU Reg. 2015/1094):	883kWh/year - 2kWh/24h
Climate class (EU Reg. 2015/1094):	Heavy Duty (5)
Energy Efficiency Index-EEI (EU Reg. 2015/1094):	37,87
Refrigerant type:	R290
GWP Index:	3
Refrigeration power:	320 W
Refrigerant weight:	70 g

The company reserves the right to make modifications to the products without prior notice. All information correct at time of printing.

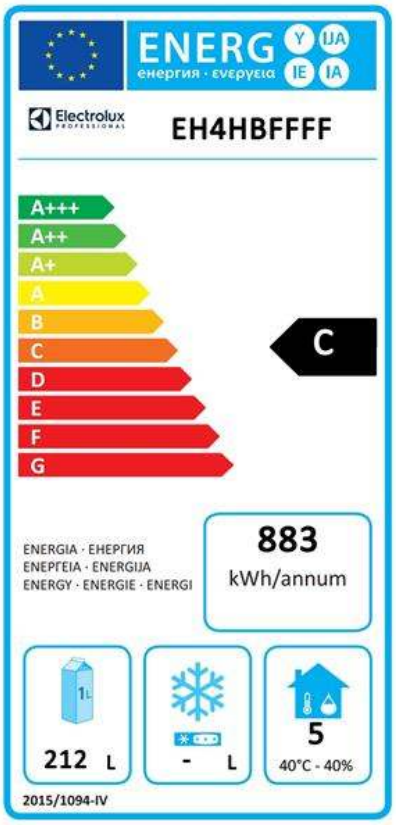

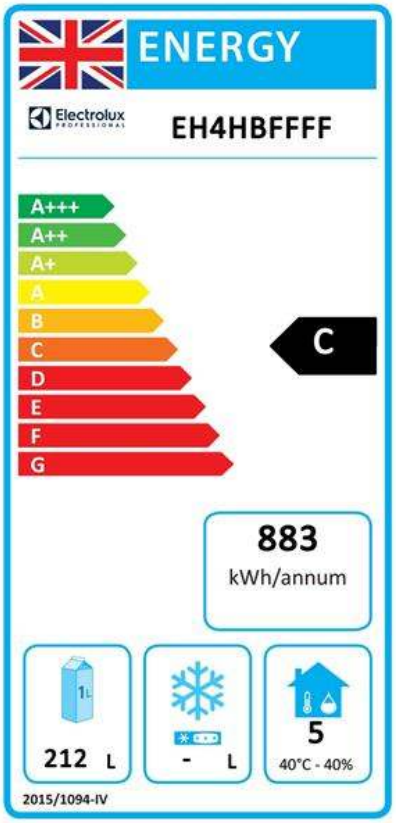

EU energy labelling from 1st July 2016

The European energy labelling scheme for professional refrigerators and freezers is based on requirements setting Minimum Energy Performance standards for commercial refrigeration cabinets sold within the EU. These requirements are designed to drive energy efficiency and environmentally friendly approach for professionals. The European energy labelling scheme will apply to all manufacturers and importers who sell and market products within the EU and it is mandatory across Europe. Important: all products which consume energy above the minimum level will not be able to be sold within the EU from 1 July 2016.

SI 2020 No. 1528.

Important: all products which consume energy above the minimum level will not be able to be sold within the EU from 1 July 2016.

The company reserves the right to make modifications to the products without prior notice. All information correct at time of printing.